15-Term Self-Calibration without an ideal THRU- or LINE-Standard

Sebastian Wagner, Research Associate

Augsburg University of Applied Sciences

Agenda

1. *Motivation*
2. *Basics of VNA Calibration*
3. *Novel 15-Term Self-Calibration*
4. *Measurement*
5. *HSD-Cable Measurement*
6. *Possible Application*
7. *Conclusion*

Agenda

1. ***Motivation***
2. *Basics of VNA Calibration*
3. *Novel 15-Term Self-Calibration*
4. *Measurement*
5. *HSD-Cable Measurement*
6. *Possible Application*
7. *Conclusion*

Motivation

Measurements on star-quad (HSD) cables.

Error-model with 15-term error-networks.

Self-calibration is advisable to reduce the effort in manufacturing the standards.

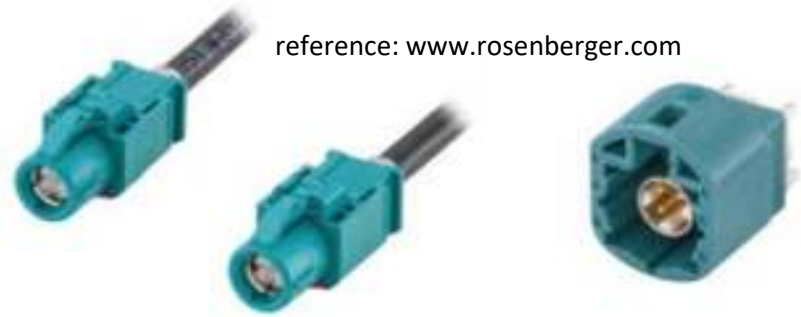

reference: www.rosenberger.com

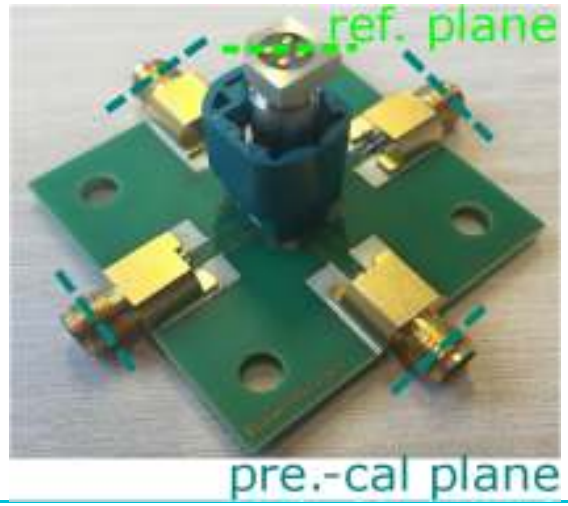

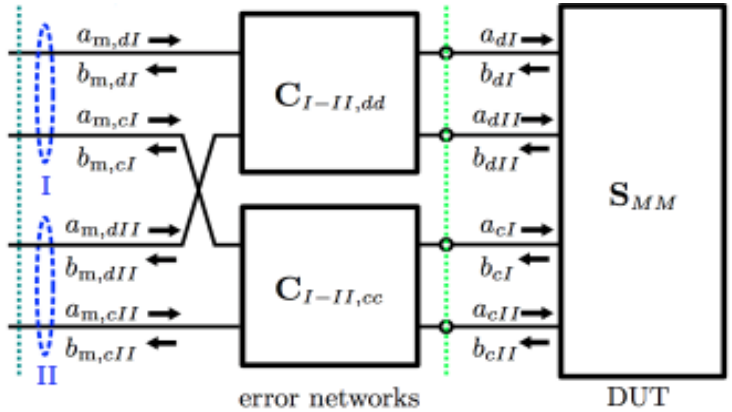

[1] S. Wagner, S. Kolb, and R. Stolle, "Self-calibration of differential cable-Adapters with intra-mode crosstalk," *German Microwave Conference (GeMiC)*, pp. 421–424, 2016.

Motivation

Ports adjoin each other at short distance, which prevents a direct and ideal THRU.

A LINE connection with a homogenous impedance will be difficult.

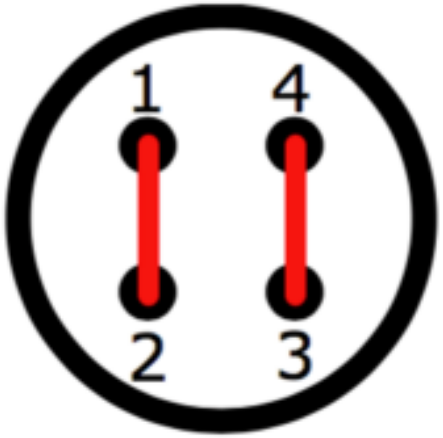

15-term self-calibration without a THRU or LINE

Motivation

Applying the novel 15-term procedures for wafer-probe self-calibration.

Pointing out possible advantages compared to the state of the art.

reference: www.cascademicrotech.com

Agenda

1. *Motivation*
2. ***Basics of VNA Calibration***
3. *Novel 15-Term Self-Calibration*
4. *Measurement*
5. *HSD-Cable Measurement*
6. *Possible Application*
7. *Conclusion*

Basics of VNA Calibration

2-Port Network Analysis

- measurement of complex wave-parameters to calculate Z-, Y-, scattering-parameters (S-parameters), etc.
- linear errors up to a reference plane can be described with error-networks
- high accuracy by system error-correction

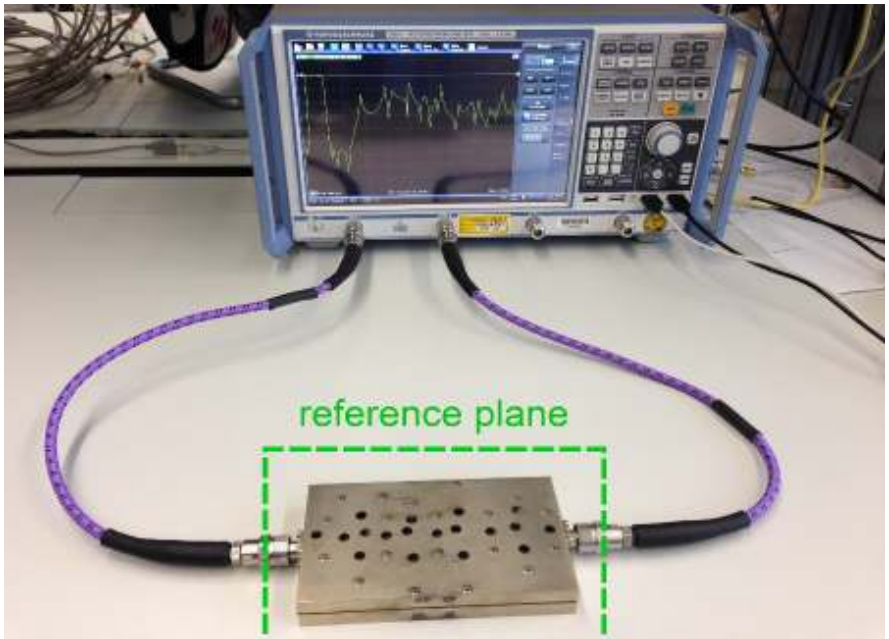

Basics of VNA Calibration

7-Term Calibration

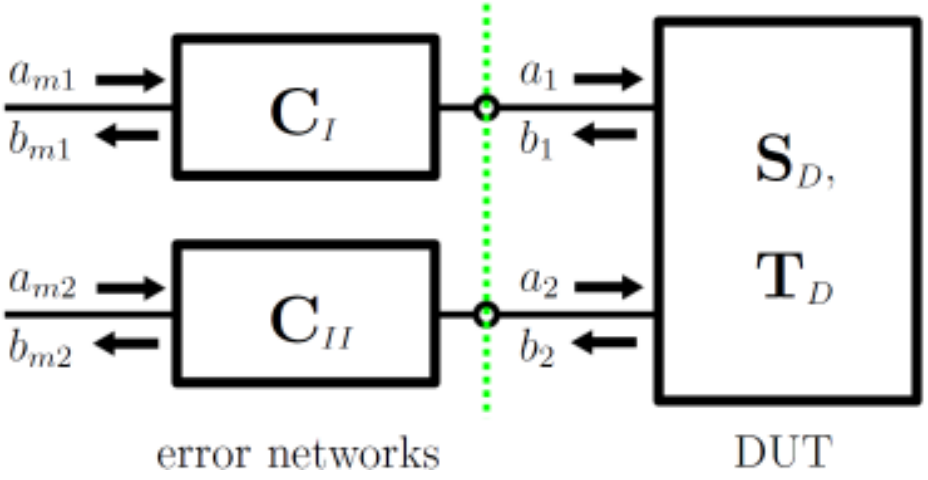

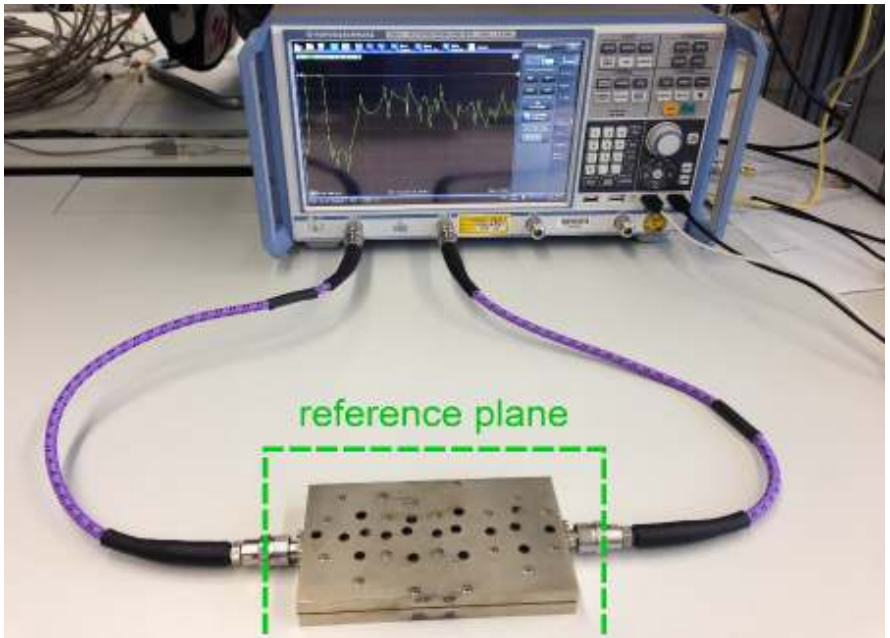

7 unknowns describe the error-networks

Basics of VNA Calibration

15-Term Calibration

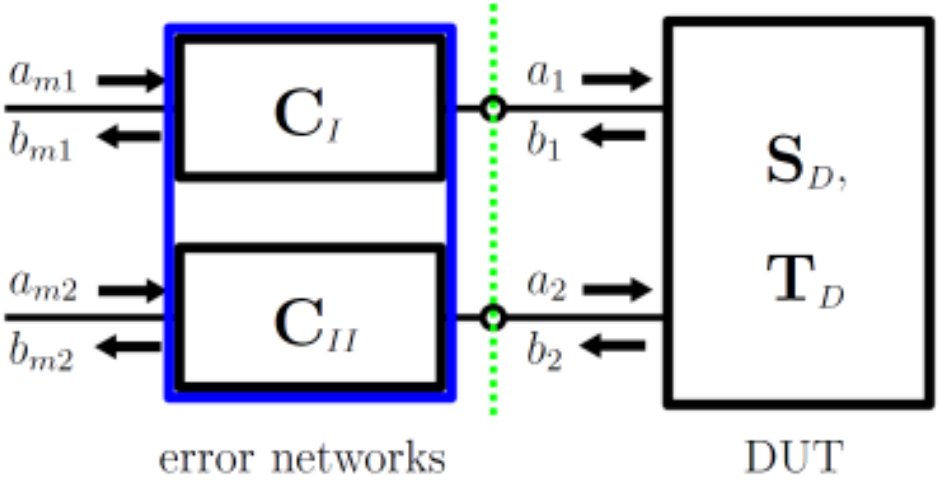

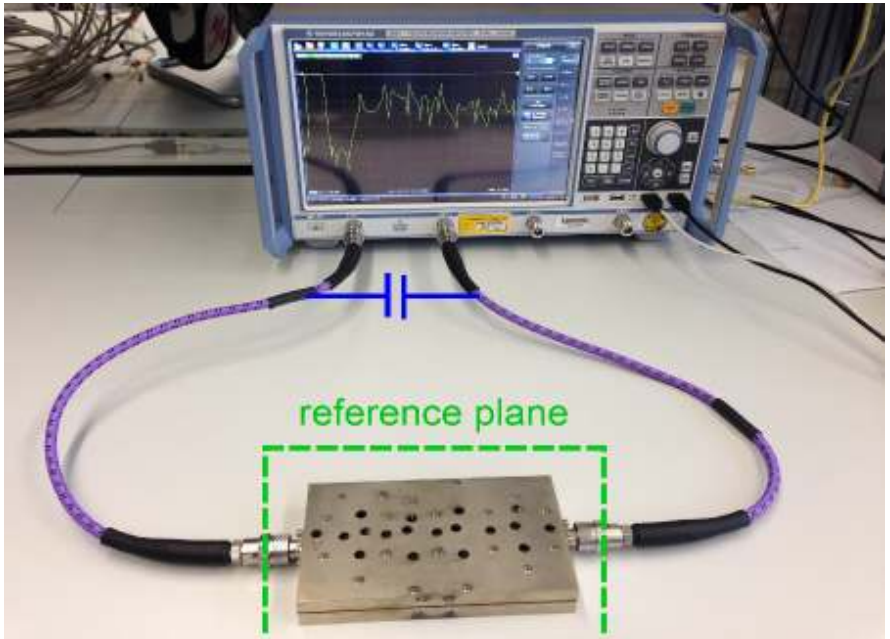

Basics of VNA Calibration

15-Term Calibration

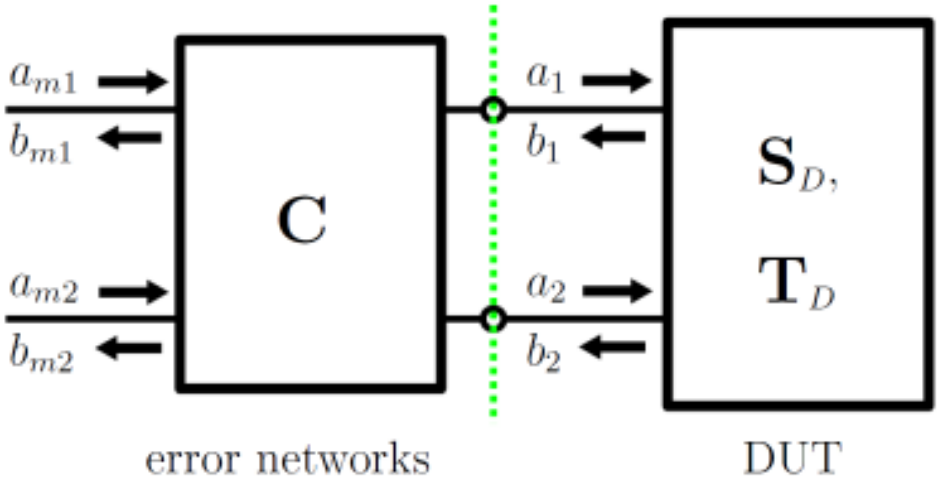

Error-network contains crosstalk between both ports.

-> 15 unknowns

Determination of the error-terms:

- direct calibration (with fully known standards)
- self-calibration (with partially unknown standards)

Agenda

1. *Motivation*
2. *Basics of VNA Calibration*
3. ***Novel 15-Term Self-Calibration***
4. *Measurement*
5. *HSD-Cable Measurement*
6. *Possible Application*
7. *Conclusion*

Novel 15-Term Self-Calibration

NMRG2 Self-Calibration

NMRG2	1.	2.	3.	4.
name	*N*	*M*	*R*	*G*
S_{11} =	*q1*	*m*	***g***	***r***
S_{12} =	*t*	0	0	0
S_{21} =	*t*	0	0	0
S_{22} =	*q2*	***r***	*m*	***g***

fully known:

- network: *q1, q2* & *t*
- match: *m*

unknown:

- reflections: ***g*** & ***r***

[2] S. Wagner and R. Stolle, "15-Term Self-Calibration without an ideal THRU- or LINE-Standard," *91st ARFTG Microwave Measurement Conference (ARFTG)*, 2018.

Novel 15-Term Self-Calibration

NMRG2 Self-Calibration

NMRG2	1.	2.	3.	4.
name	*N*	*M*	*R*	*G*
S_{11} =	*q1*	*m*	***g***	***r***
S_{12} =	*t*	0	0	0
S_{21} =	*t*	0	0	0
S_{22} =	*q2*	***r***	*m*	***g***

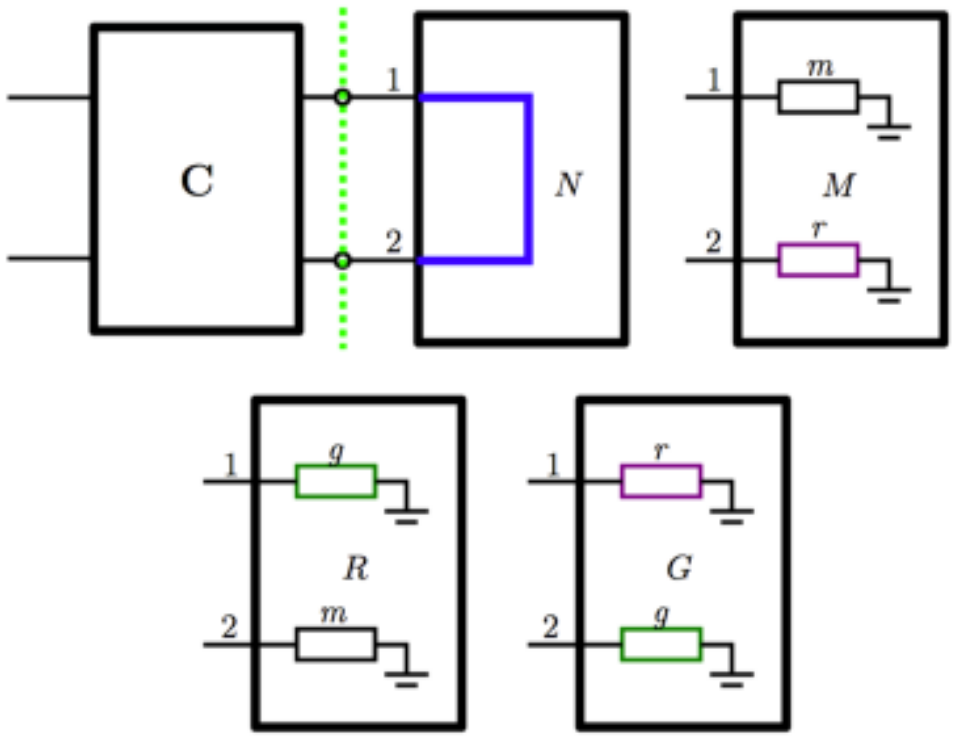

Novel 15-Term Self-Calibration

NMRG2 Self-Calibration

- based on the so called „General NMRG“ theory (by Gronefeld & Schiek) [3]

measurement values

$$\mathrm{trace}\{\boxed{\Delta\mathbf{M}_{N,M}^{-1}\cdot\Delta\mathbf{M}_{R,N}\cdot\Delta\mathbf{M}_{R,G}^{-1}\cdot\Delta\mathbf{M}_{G,M}}\} = b_1 = \mathrm{trace}\{\boxed{\Delta\mathbf{S}_{N,M}^{-1}\cdot\Delta\mathbf{S}_{R,N}\cdot\Delta\mathbf{S}_{R,G}^{-1}\cdot\Delta\mathbf{S}_{G,M}}\}$$

$$\det\{\boxed{\Delta\mathbf{M}_{N,M}^{-1}\cdot\Delta\mathbf{M}_{R,N}\cdot\Delta\mathbf{M}_{R,G}^{-1}\cdot\Delta\mathbf{M}_{G,M}}\} = b_2 = \det\{\boxed{\Delta\mathbf{S}_{N,M}^{-1}\cdot\Delta\mathbf{S}_{R,N}\cdot\Delta\mathbf{S}_{R,G}^{-1}\cdot\Delta\mathbf{S}_{G,M}}\}$$

S-matrices

- with the calibration standards in the table shown before, two equations for the determination of the unknown factors ***r*** & ***g*** can be found

$$\boldsymbol{r} = f(b1, b2, q1, q2, t, m)$$

$$\boldsymbol{g} = f(b1, b2, q1, q2, t, m, r)$$

dependent on:

- measurement values
- known calibration standards
- each other

[3] A. Gronefeld and B. Schiek, "Network-analyzer self-calibration with four or five standards for the 15-term error-model," *1997 IEEE MTT-S International Microwave Symposium Digest*, vol. 3, pp. 1655–1658, 1997.

Novel 15-Term Self-Calibration

MONS5 Self-Calibration

MONS5	1.	2.	3.	4.	5.
name	MM	OO	SS	UR	N
S_{11} =	0	*o*	*s*	***ra***	***na***
S_{12} =	0	0	0	0	***t***
S_{21} =	0	0	0	0	***t***
S_{22} =	0	*o*	*s*	***rb***	***nb***
unknowns	0	0	0	2	3

fully known:

- reflections: *o* & *s*

unknown:

- reflections: ***ra*** & ***rb***
- network: ***na***, ***nb*** & ***t***

[4] S. Wagner and R. Stolle, "15-Term Self-Calibration without an ideal THRU- or LINE-Standard," *91st ARFTG Microwave Measurement Conference (ARFTG)*, 2018.

Novel 15-Term Self-Calibration

MONS5 Self-Calibration

MONS5	1.	2.	3.	4.	5.
name	MM	OO	SS	UR	N
S_{11} =	0	*o*	*s*	***ra***	***na***
S_{12} =	0	0	0	0	***t***
S_{21} =	0	0	0	0	***t***
S_{22} =	0	*o*	*s*	***rb***	***nb***
unknowns	0	0	0	2	3

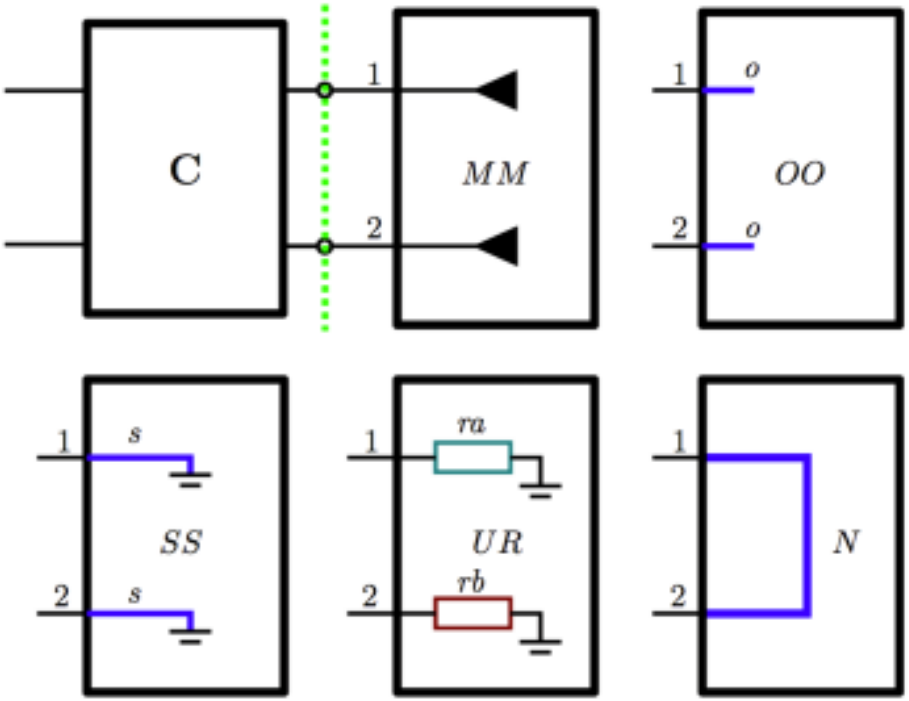

Novel 15-Term Self-Calibration

MONS5 Self-Calibration

- based on the so called „General MURN“ theory (by Heuermann)[5]
- provides 5 nonlinear equations for maximal 5 unknowns
- with the calibration standards in the table shown before, all equations for the determination of the unknown factors can be found

[5] H. Heuermann, "Sure methods of on-wafer scattering parameter measurements with self-calibration procedures," *ARFTG Microwave Measurements Conference-Spring, 47th*, vol. 29, pp. 136–145, 1996.

Agenda

1. *Motivation*
2. *Basics of VNA Calibration*
3. *Novel 15-Term Self-Calibration*
4. ***Measurement***
5. *HSD-Cable Measurement*
6. *Possible Application*
7. *Conclusion*

Measurements

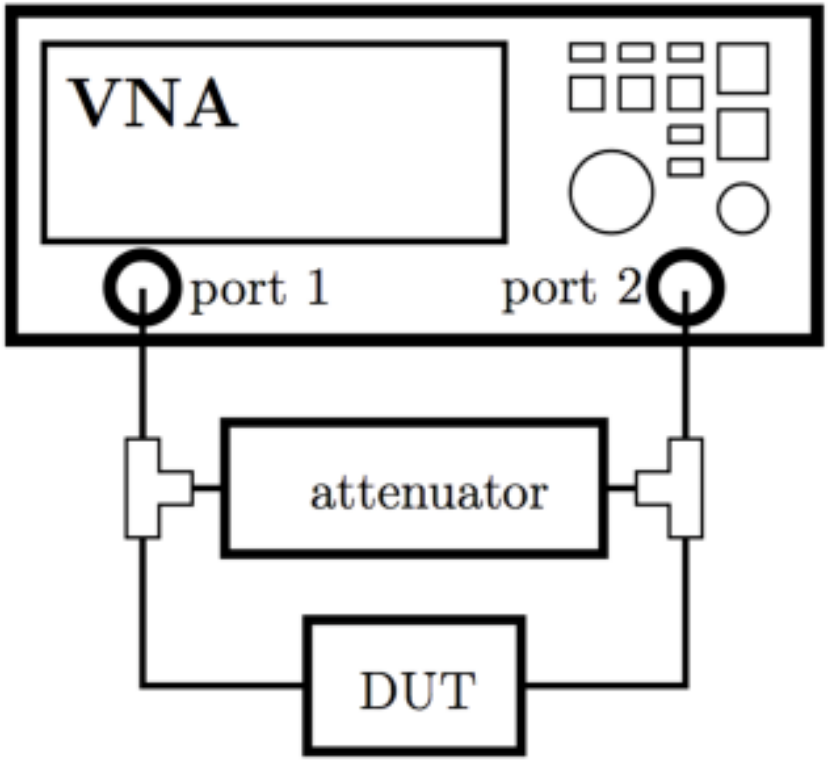

Measurement Setup

- R&S ZVA24
- 3.5 mm coaxial standards
- f = 10 MHz – 24 GHz
- X-talk: 6dB attenuator
- IF-bandwidth: 1 kHz
- UOSM/SOLR reference meas.

Measurements

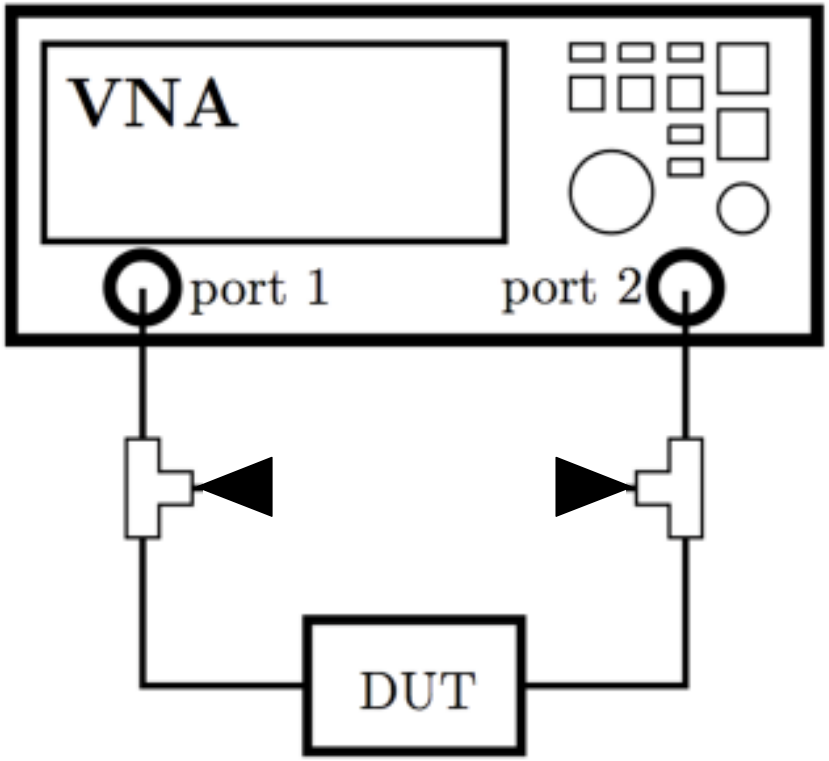

Reference Measurement of the DUT with UOSM/SOLR

- R&S ZVA24
- 3.5 mm coaxial standards
- f = 10 MHz – 24 GHz
- IF-bandwidth: 1 kHz
- same match standard

Measurements

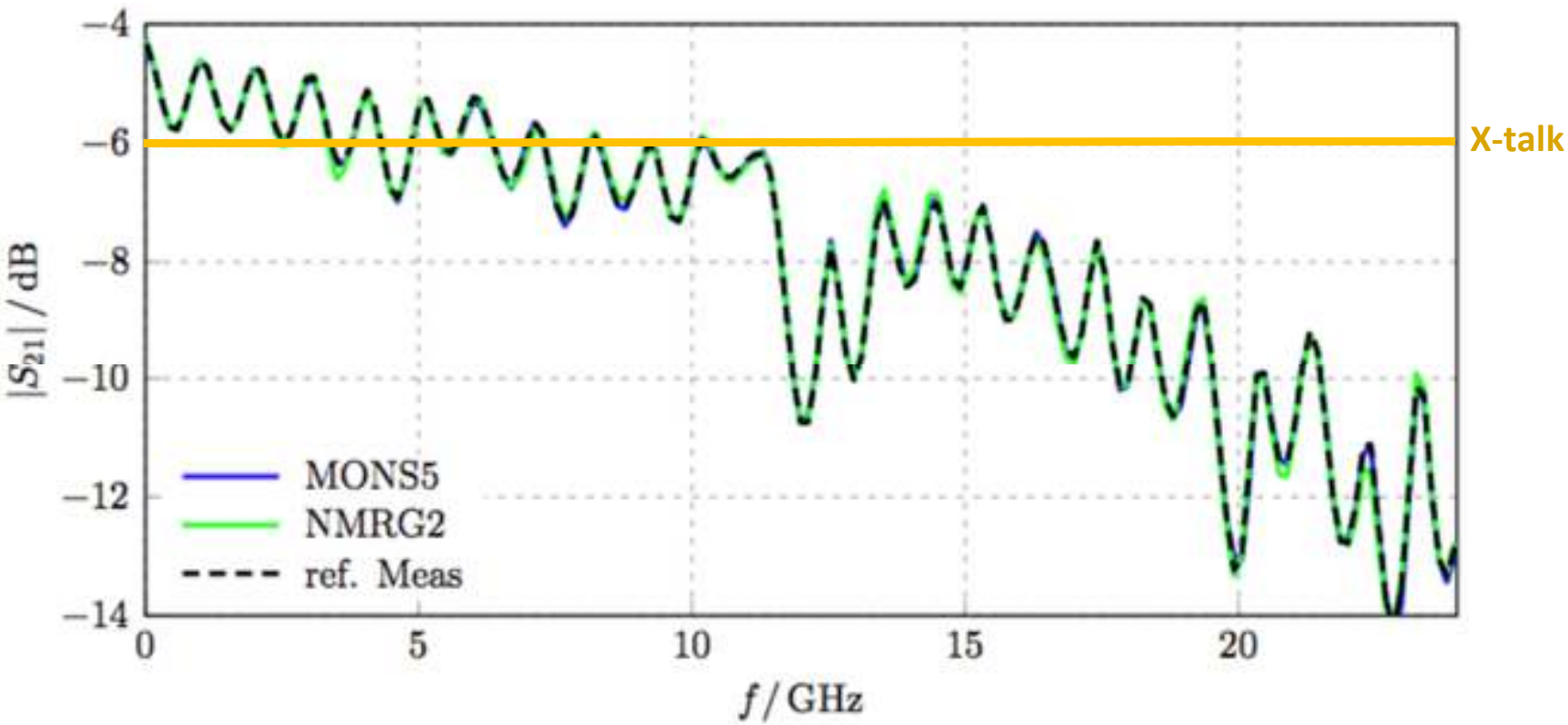

Measurements

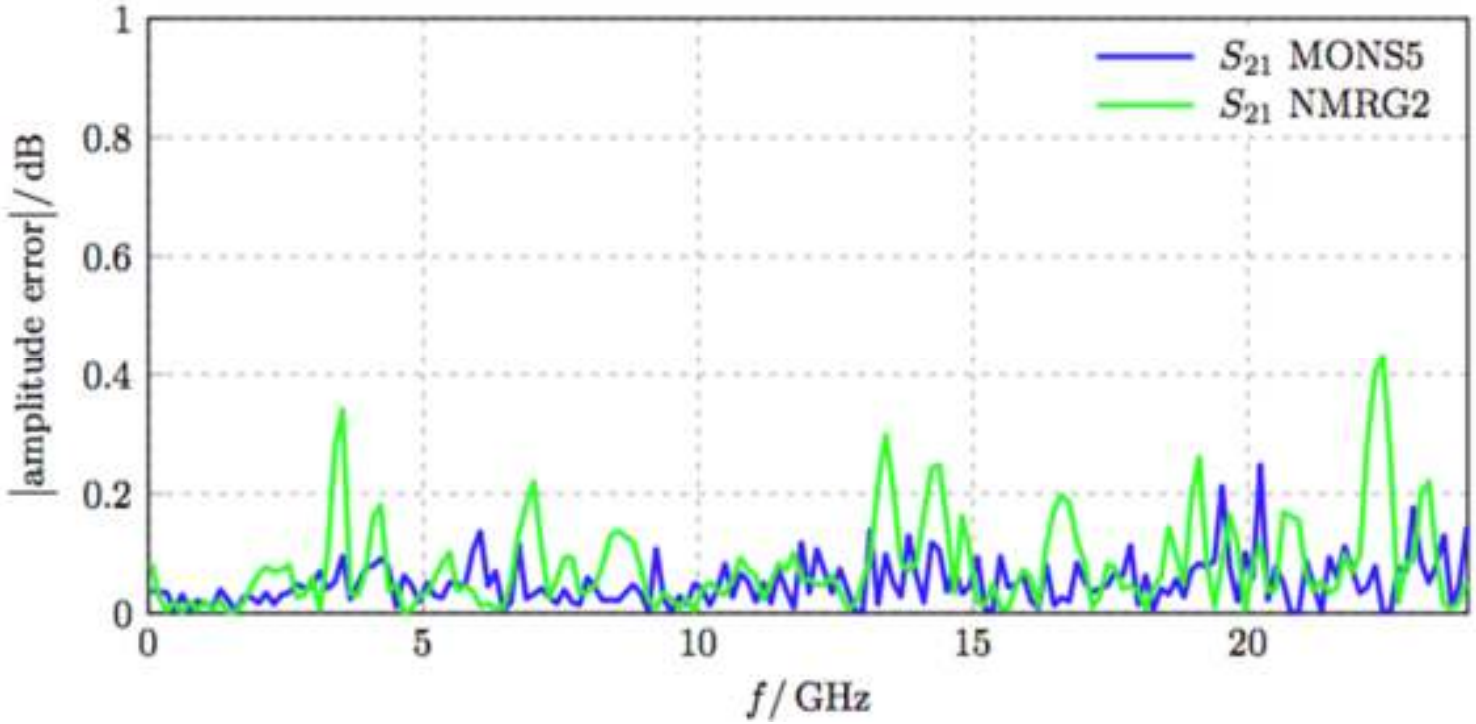

Measurements

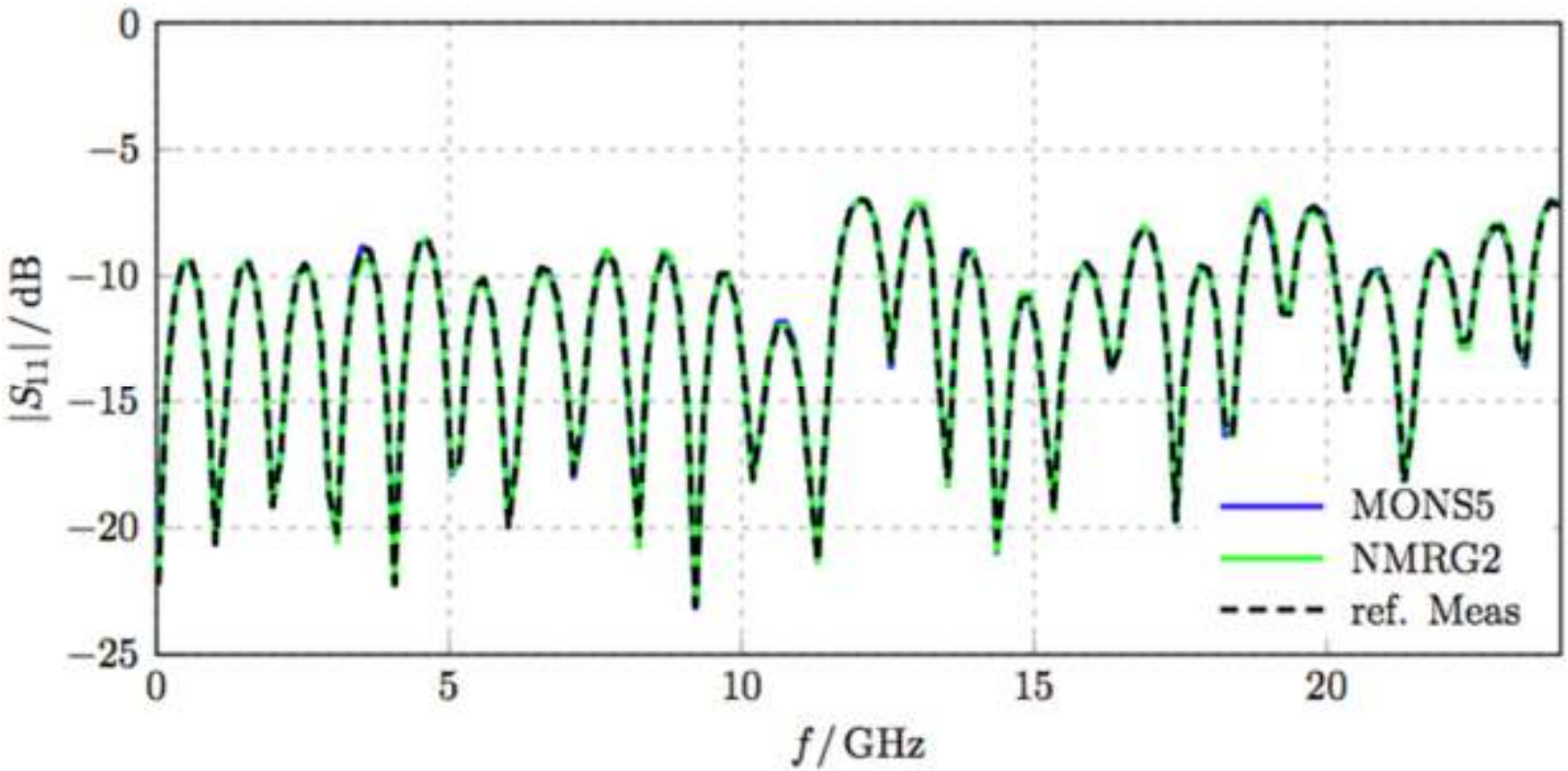

Measurements

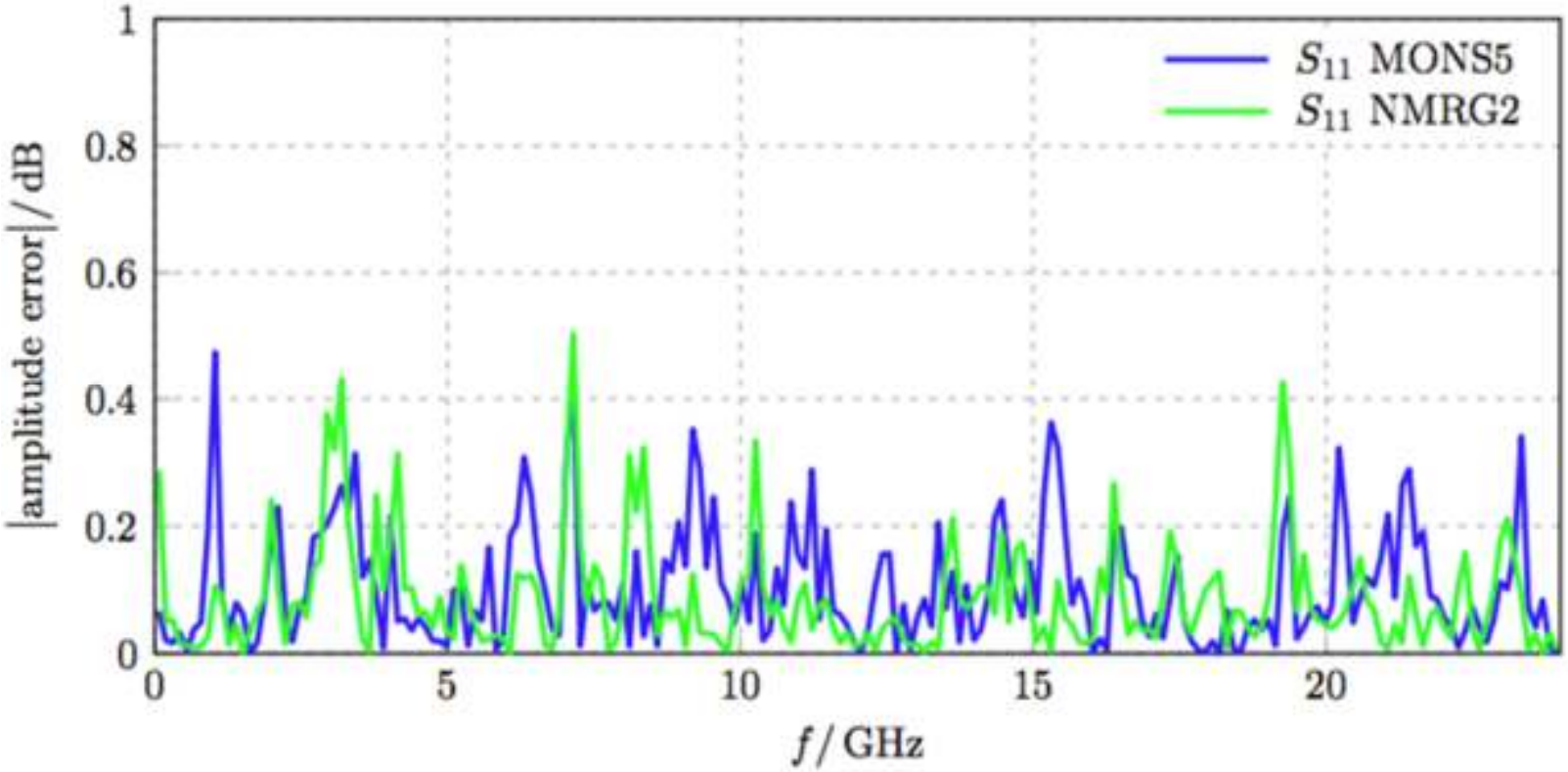

Measurements

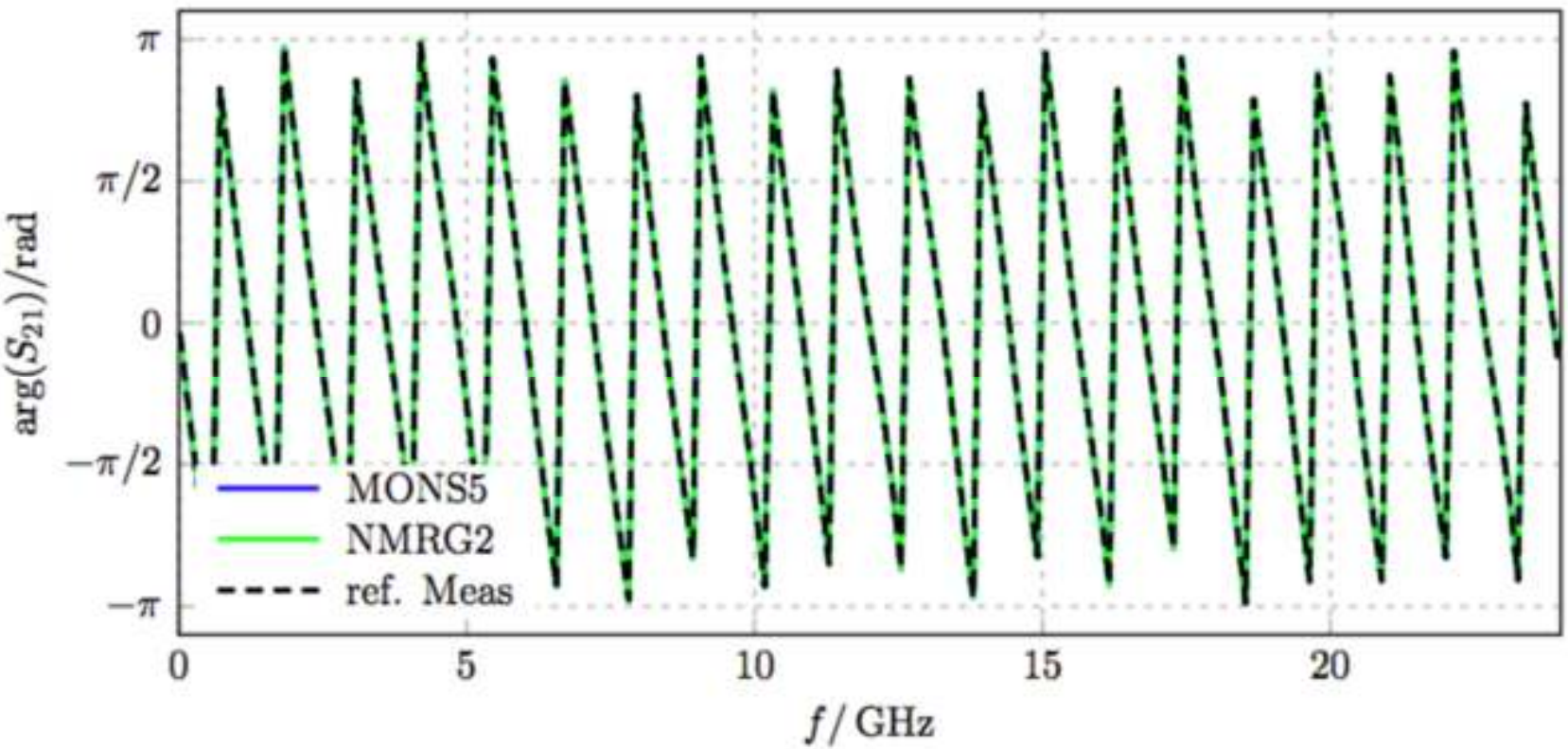

Measurements

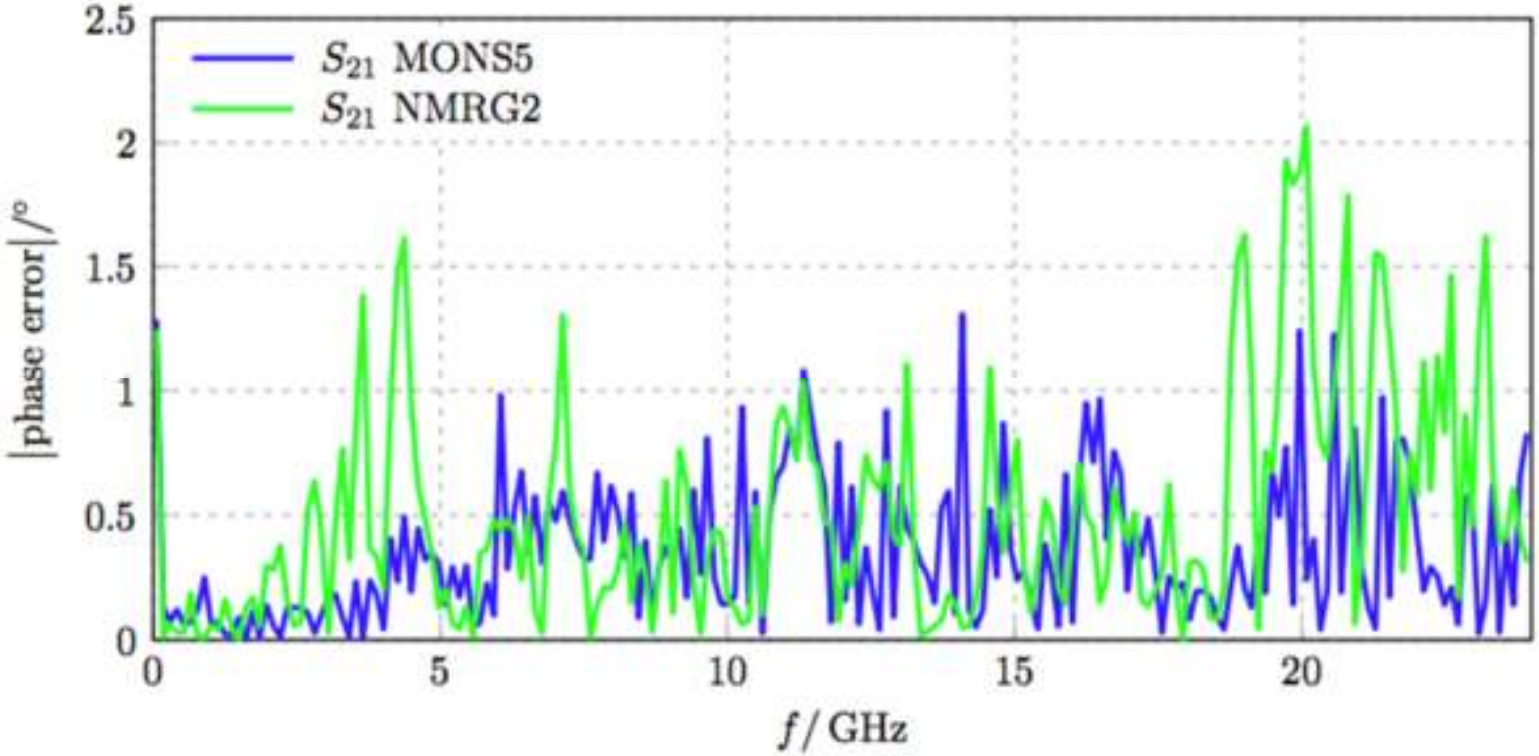

Agenda

1. *Motivation*
2. *Basics of VNA Calibration*
3. *Novel 15-Term Self-Calibration*
4. *Measurement*
5. ***HSD-Cable Measurement***
6. *Possible Application*
7. *Conclusion*

HSD-Cable Measurements

Measurement Setup and Error-Model

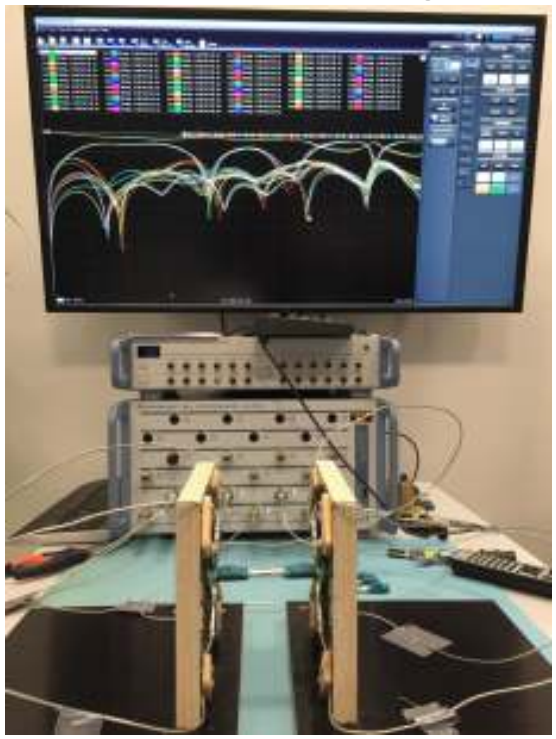

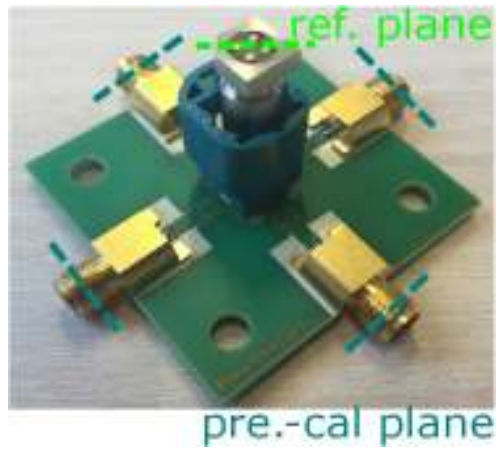

[6] S. Wegner and R. Stolle, "Novel Self-Calibration Procedures for Channel Characterization of Automotive Communication Cables in the GHz Range," *IEEE 85th Vehicular Technology Conference (VTC Spring)*, 2018.

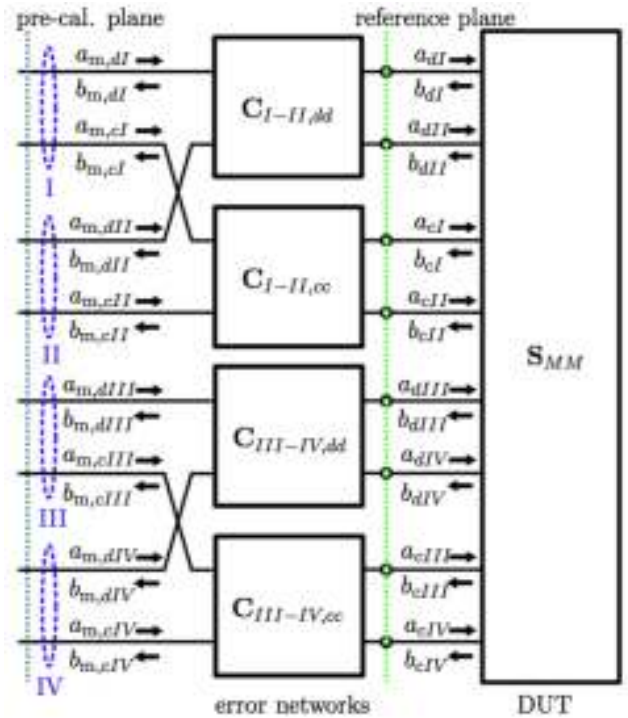

HSD-Cable Measurements

Differential Reflection of a 103 Ohm Verification DUT

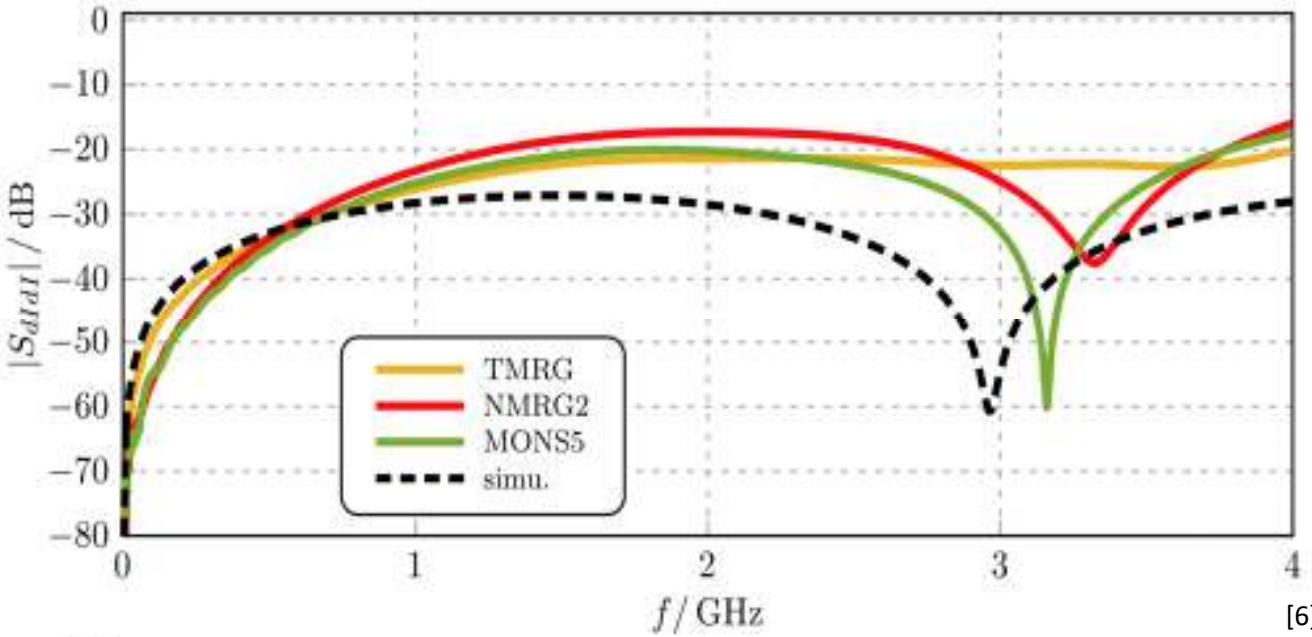

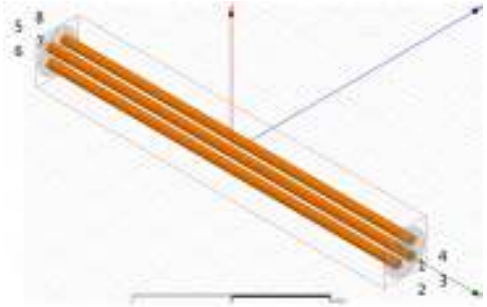

[6] S. Wagner and R. Stoße, "Novel Self-Calibration Procedures for Channel Characterization of Automotive Communication Cables in the GHz Range," *IEEE 85th Vehicular Technology Conference (VTC Spring)*, 2018.

Agenda

1. *Motivation*
2. *Basics of VNA Calibration*
3. *Novel 15-Term Self-Calibration*
4. *Measurement*
5. *HSD-Cable Measurement*
6. ***Possible Application***
7. *Conclusion*

Possible Application

GSSG Probes

reference: www.cascademicrotech.com

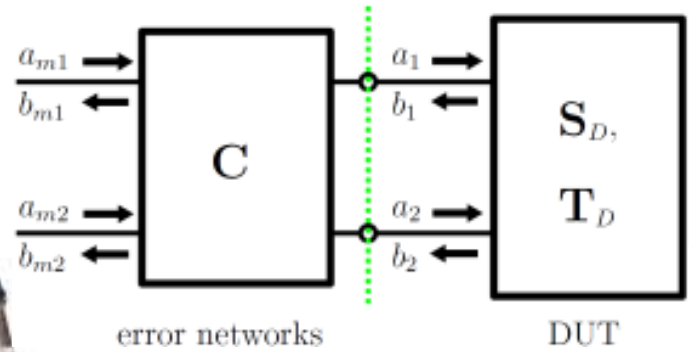

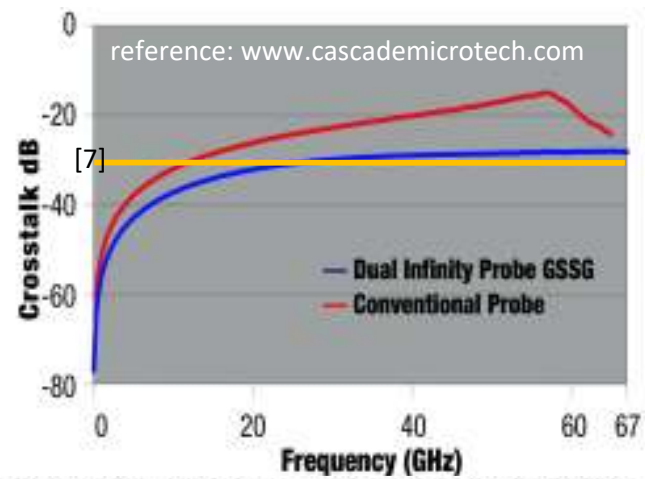

[7] M. Wojnowski, V. Issakov, G. Sommer, and R. Weigel, "Multimode TRL Calibration Technique for Characterization of Differential Devices," *IEEE Transactions on Microwave Theory and Techniques*, vol. 60, no. 7, pp. 2220-2247, 2012.

Possible Application

Calibration of measurement setups with GSSG probes:

- at frequencies of about 10/20 GHz 15-term calibration is advisable
- NMRG2 & MONS5 should give highest accuracy

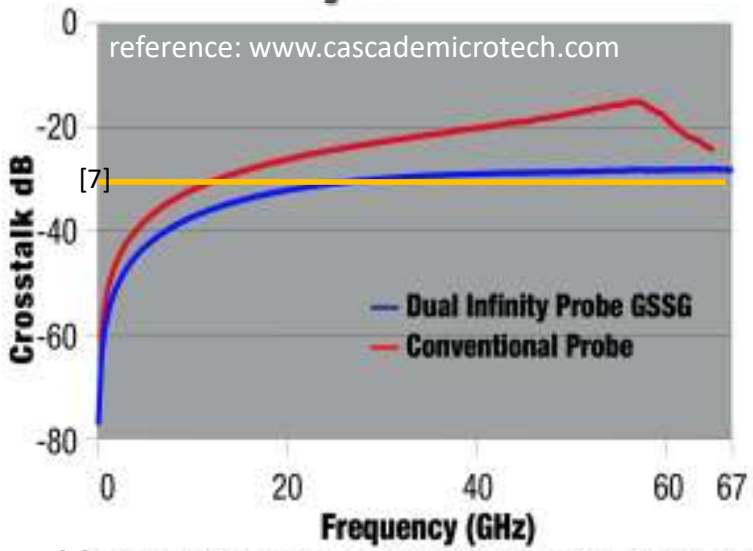

[7] M. Wojnowski, V. Issakov, G. Sommer, and R. Weigel, "Multimode TRL Calibration Technique for Characterization of Differential Devices," *IEEE Transactions on Microwave Theory and Techniques*, vol. 60, no. 7, pp. 2220-2247, 2012.

Possible Application

Characterization of GSSG probes at high frequencies:

- pre.-cal. at coaxial connectors & cal. of probe directly at the pins
- error-network describes behavior of probe
- investigations about symmetry / mode conversion (to check the manufacturing quality)
- deembedding without calibration

Other non-metrology interfaces with 15-term error-networks.

reference: www.cascademicrotech.com

Possible Application

Possible advantages, depending on the application:

- no limitations for the reference plane
- less effort in manufacturing the calibration-standards
- using on-wafer-probes up to higher frequencies (if the crosstalk is the limiting factor)
- no ideal MATCH is necessary

reference: www.cascademicrotech.com

Agenda

1. *Motivation*
2. *Basics of VNA Calibration*
3. *Novel 15-Term Self-Calibration*
4. *Measurement*
5. *HSD-Cable Measurement*
6. *Possible Application*
7. ***Conclusion***

Conclusion

- presentation of two novel 15-term self-calibration procedures **NMRG2** and **MONS5**
- successful verification of both novel procedures on a coaxial measurement setup
- successful application for star-quad cable measurements
- discussion of further possible applications

Acknowledgment!

Rosenberger Hochfrequenztechnik

GmbH & Co. KG

Rosenberger

Thank You!

For questions, please contact:

Sebastian Wagner

Augsburg University of Applied Sciences

sebastian.wagner@hs-augsburg.de

+49 821 5586-3646

www.i-red.org